TILTING CEILING FLANGE FOR ARAKNO, BLACK

SKU: 11930

Categories: Arakno, Video Projector Mounts

Also available in:

- **White (Cod: 11931)**
- **Silver (Cod: 11929)**

QUOTATION REQUEST
×

REQUEST A QUOTATION

Name *

Surname *

Company *

Email *

Message

☐I have read the information on the Privacy Policy and authorize the processing of personal data (*)
Privacy Policy

Send

×
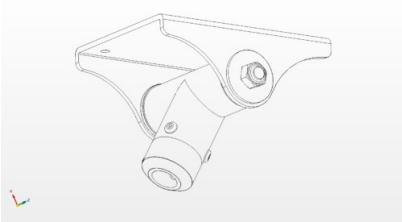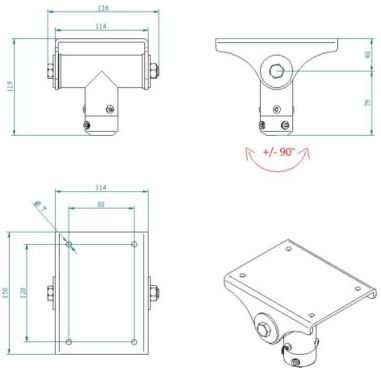
GALLERY